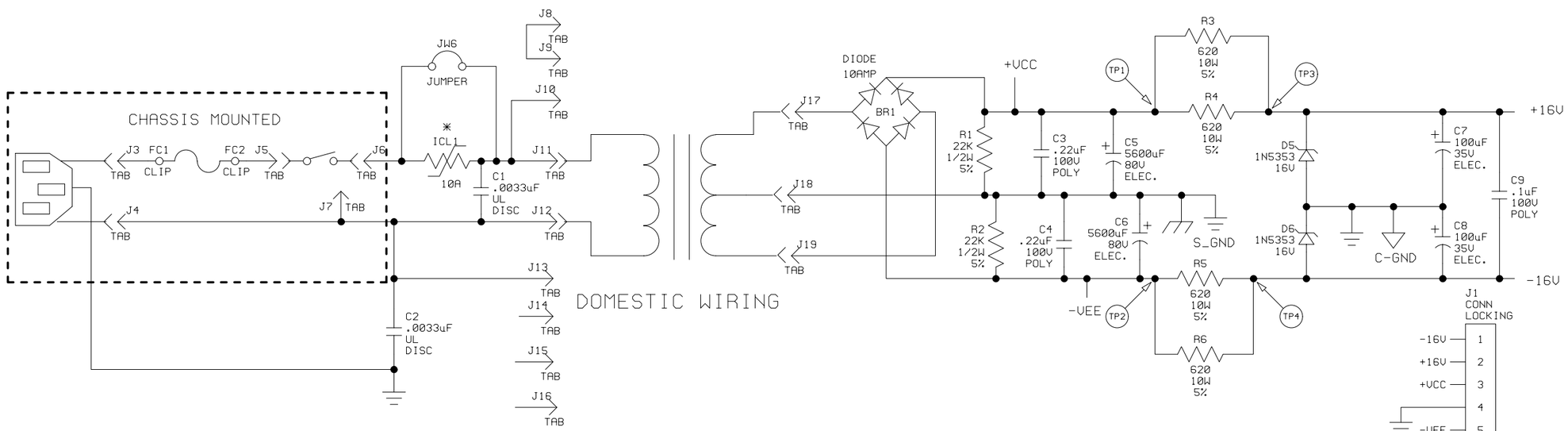

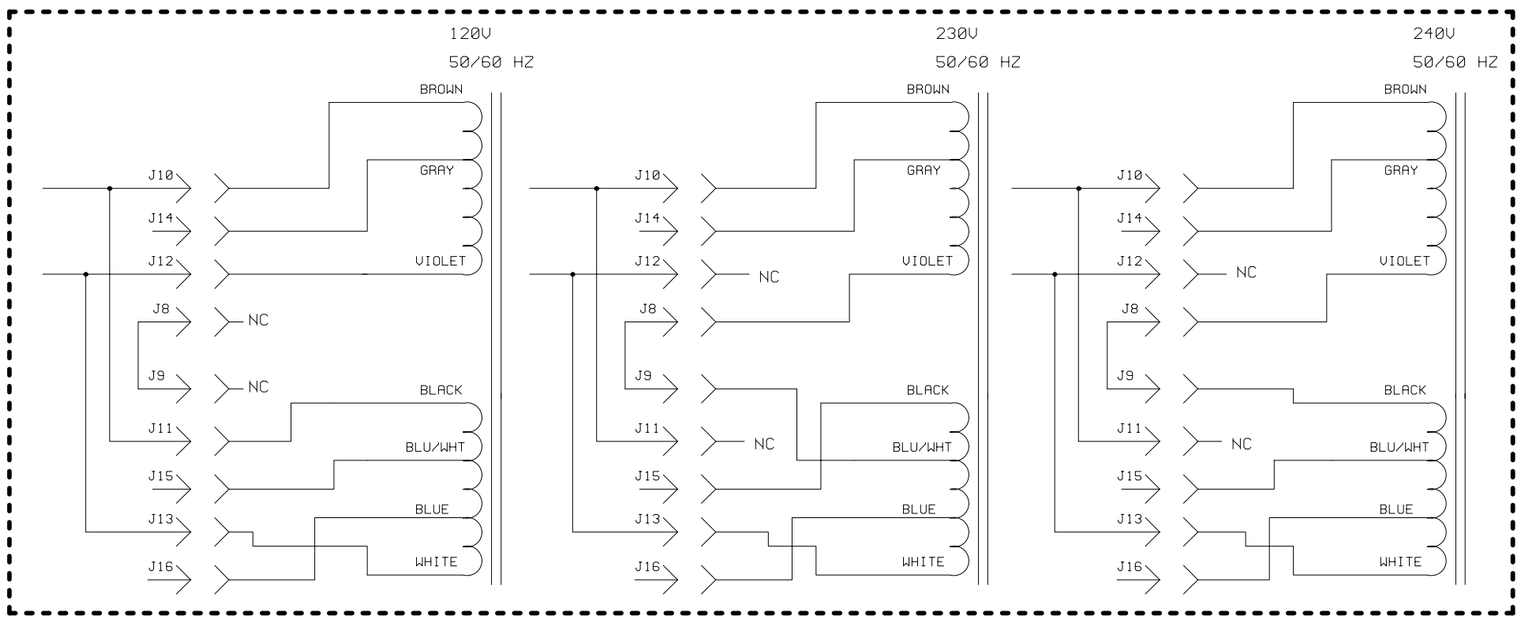

EXPORT WIRING

* USED ON -42 ONLY

CAUTION:
THIS SCHEMATIC IS PROVIDED FOR USE BY QUALIFIED PERSONNEL.
TO AVOID RISK OF ELECTRIC SHOCK, REFER SERVICING TO QUALIFIED SERVICE PERSONNEL. DO NOT PERFORM ANY SERVICING BEYOND THAT EXPLAINED IN THE OPERATING INSTRUCTIONS.

NOTES:
1) CAUTION: SHOCK HAZARD!!
THIS UNIT CONTAINS HAZARDOUS VOLTAGE. DISCONNECT POWER AND BE SURE POWER SUPPLY IS DISCHARGED BEFORE TOUCHING INTERNAL PARTS.
2) UNLESS NOTED, RESISTOR VALUES IN OHMS, 1/4W-5% TOL. CAPACITOR VALUES IN MICROFARADS, 50V-10% TOL.
3) VOLTAGES ARE MEASURED WITH 1 MEGOHM OSCILLOSCOPE AND 10 MEGOHM DIGITAL VOLTMETER.

T.P.	AC VOLTAGE	DC VOLTAGE	SIGNAL
1	2.5V_P-P	+56VDC	
2	2.5V_P-P	-56VDC	
3	-	+16VDC	—
4	-	-16VDC	—
5	-	-	
6	-	-	
7	-	-	

NO SIGNAL NO LOAD @ 120VAC

REV	DATE	BY	CHK'D	DESCRIPTION
3	00/00/00	XXX	XXX	DESC
2	3-19-98	RLB	JD	UPDATED_TO_AGREE_WITH_PICTORIAL_PER_ECO_980247
1	3-9-98	RLB	JD	UPDATED_TO_AGREE_WITH_BOM_PER_ECO_980247

SIGNATURES:		DATE:	
DRAWN:	RLB	1-24-98	11880 BORMAN DR. ST. LOUIS, MISSOURI 63146
CHK'D:	JD	2-3-98	PROJECT NAME: CE-112SPG
APP'D:	JD	2-3-98	
ORIGINAL ISSUED:		00/00/00	DRAWING NAME: P.S._SCHEMATIC
PLOT DATE:		2-3-98	DRAWING NO. 07S350-02/42 REV. 2_
FILE NAME:		35002C2_	SCALE: NONE SHEET: 1_OF_1