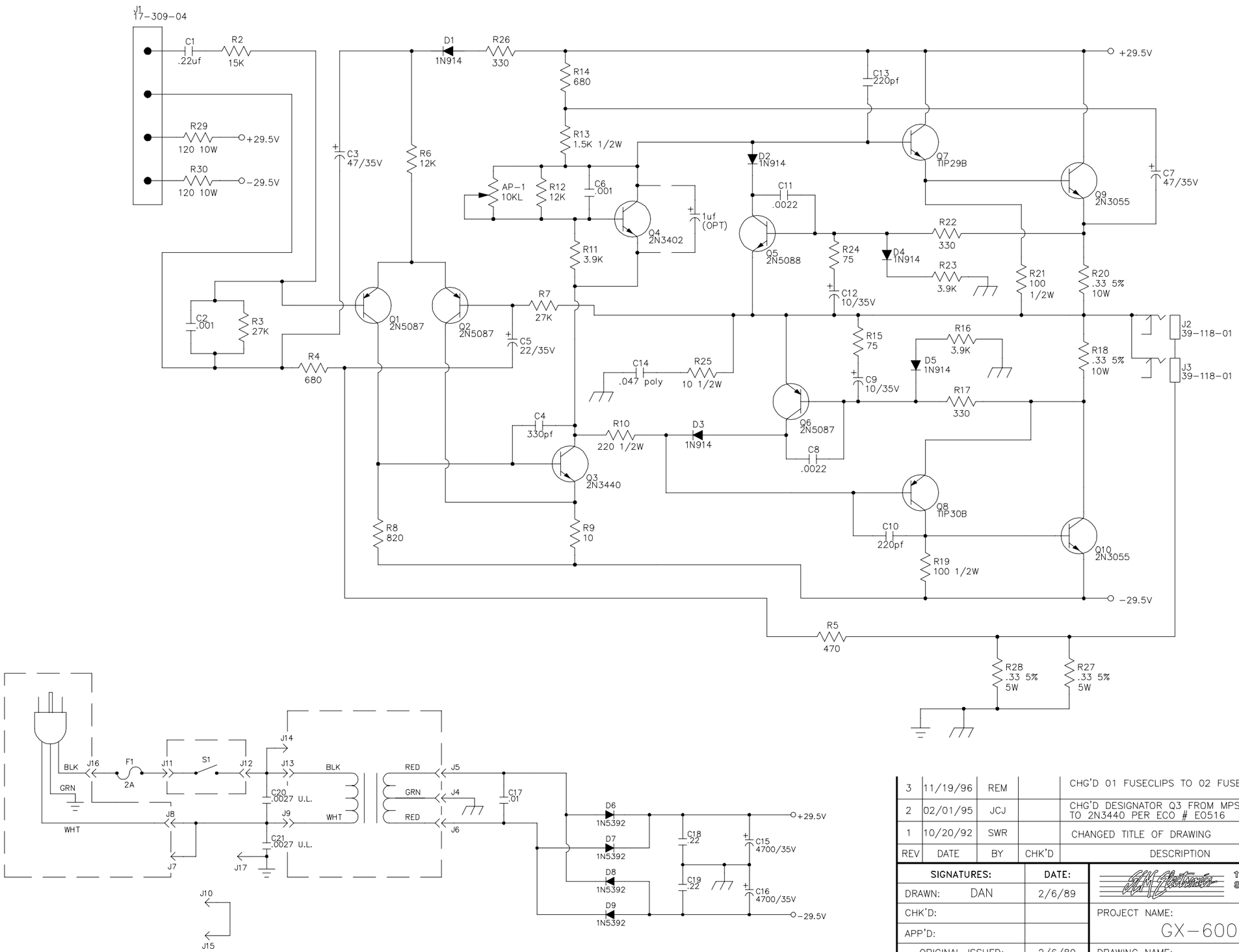

REV	DATE	BY	CHK'D	DESCRIPTION
3	11/19/96	REM		CHG'D 01 FUSECLIPS TO 02 FUSECLIPS
2	02/01/95	JCJ		CHG'D DESIGNATOR Q3 FROM MPS-U-06 TO 2N3440 PER ECO # E0516
1	10/20/92	SWR		CHANGED TITLE OF DRAWING
6				
5				
4	10/01/97	MAG		CHG'D 12-226-32,12-476-32,96-587-01,96-588-01 TO RADIAL INSERTION PARTS PER E970571.

SIGNATURES:		DATE:
DRAWN:	DAN	2/6/89
CHK'D:		
APP'D:		
ORIGINAL ISSUED:		2/6/89
PLOT DATE:		10/01/97
PLOT TIME:		14:26:32
FILE NAME:		42201h4_

11880 BORMAN DR.
ST. LOUIS, MISSOURI
63146

PROJECT NAME: GX-600H

DRAWING NAME: SCHEMATIC DRAWING

DRAWING NO. 07S422-01

SCALE: 1:1 SHEET: 1 OF 1