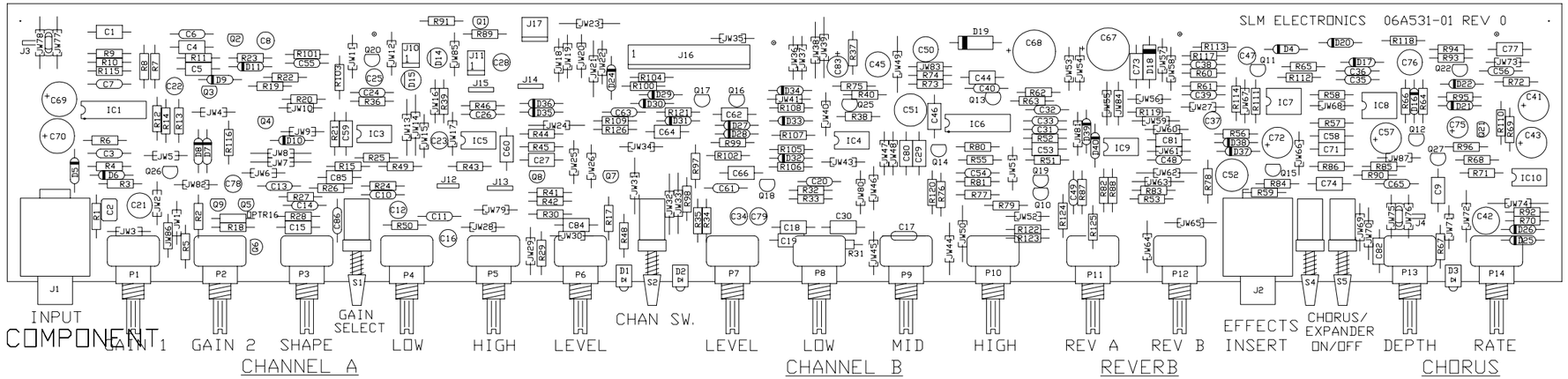

REF DES	PART #	DESCRIPTION	
C1	10A473-11	.047uF	100V
C2	10R682-03	.0068uF	100V
C3	10A474-01	.47uF	50V
C4	10A224-01	.22uF	50V
C5	10A104-01	.1uF	50V
C6	10A153-01	.015uF	50V
C7	10A332-01	.0033uF	100V
C8	12R105-51	1uF	50V
C9	10A473-11	.047uF	100V
C10	10A472-11	.0047uF	100V
C11	10A474-01	.47uF	50V
C12	12R105-51	1uF	50V
C13	10A103-11	.01uF	100V
C14	10A562-01	.0056uF	50V
C15	10A224-01	.22uF	50V
C16	12R225-51	2.2uF	50V
C17	10A331-11	330pF	100V
C18	10A224-01	.22uF	50V
C19	10A224-01	.22uF	50V
C20	10A560-21	56pF	200V
C21	12R106-36	10uF	35V
C22	12R105-51	1uF	50V
C23	12R105-51	1uF	50V
C24	10A560-21	56pF	200V
C25	12R105-51	1uF	50V
* C26	10A560-21	56pF	200V
* C27	10A224-01	.22uF	50V
C28	12R225-51	2.2uF	50V
C29	10A104-01	.1uF	50V
C30	10A224-01	.22uF	50V
C31	10A102-11	.001uF	100V
C32	10A472-11	.0047uF	100V
C33	10A102-11	.001uF	100V
C34	12R225-51	2.2uF	50V
C35	10A330-21	33pF	200V
C36	10A152-11	.0015uF	100V
C37	12R225-51	2.2uF	50V
C38	10A682-01	.0068uF	100V
C39	10A153-01	.015uF	50V
C40	10A152-11	.0015uF	100V
C41	12R476-35	47uF	35V
⚠ C42	12R476-81	47uF	16V
C43	12R476-35	47uF	35V
C44	10A224-01	.22uF	50V
C45	12R106-36	10uF	35V
C46	10A104-01	.1uF	50V
C47	12R225-51	2.2uF	50V
C48	10A223-01	.022uF	50V
C49	10A223-01	.022uF	50V
C50	12R106-36	10uF	35V
⚠ C51	12R226-81	22uF	50V
⚠ C52	12R226-81	22uF	50V
C53	10A104-01	.1uF	50V
C54	10A101-21	100pF	200V
C55	10A103-11	.01uF	100V
C56	10A103-11	.01uF	100V
C57	12R476-35	47uF	35V
C58	10A104-01	.1uF	50V
C59	10A473-11	.047uF	100V
C60	10A473-11	.047uF	100V
C61	10A103-11	.01uF	100V
C62	10A473-11	.047uF	100V
C63	10A103-11	.01uF	100V
C64	10A473-11	.047uF	100V
C65	10A103-11	.01uF	100V
C66	10A473-11	.047uF	100V
⚠ C67	12R227-32	220uF	35V
⚠ C68	12R227-32	220uF	35V
⚠ C69	12R107-32	100uF	35V
⚠ C70	12R107-32	100uF	35V
C71	10A104-01	.1uF	50V
C72	12R476-35	47uF	35V
C73	10A473-11	.047uF	100V
C74	10A473-11	.047uF	100V
C75	12R106-35	10uF	35V
C76	12R106-36	10uF	50V
C77	10A473-11	.047uF	100V
C78	12R225-51	2.2uF	50V
C79	12R225-51	2.2uF	50V
C80	10A473-11	.047uF	100V
C81	10A473-11	.047uF	100V
C82	10A104-01	.1uF	50V
C83	12R105-50	1uF	50V
C84	10A473-11	.047uF	100V
C85	10A473-11	.047uF	100V
C86	10A153-11	.015uF	50V
D1	21-501-01	RED	LED
D2	21-502-01	GREEN	LED
D3	21-503-01	YELLOW	LED
D4	21A437-01	1N4737A	7.5V/1W
D5	21A914-01	1N914	100V/0.1A
D6	21A914-01	1N914	100V/0.1A
D7	21A146-01	1N746A	3.3V/0.5W
D8	21A146-01	1N746A	3.3V/0.5W
D9	21A914-01	1N914	100V/0.1A
D10	21A914-01	1N914	100V/0.1A
D11	21A914-01	1N914	100V/0.1A
** D14	21-117-01	RED	LED
** D15	21-117-01	RED	LED
D16	21A914-01	1N914	100V/0.1A
D17	21A914-01	1N914	100V/0.1A
D18	21-553-01	1N5353	16V
D19	21-553-01	1N5353	16V
D20	21A437-01	1N4737A	7.5V/1W
D21	21A914-01	1N914	100V/0.1A
D22	21A914-01	1N914	100V/0.1A
D24	21A914-01	1N914	100V/0.1A
D25	21A146-01	1N746A	3.3V/0.5W
D26	21A146-01	1N746A	3.3V/0.5W
D27	21A914-01	1N914	100V/0.1A
D28	21A914-01	1N914	100V/0.1A
D29	21A146-01	1N746A	3.3V/0.5W
D30	21A914-01	1N914	100V/0.1A
D31	21A146-01	1N746A	3.3V/0.5W
D32	21A914-01	1N914	100V/0.1A
D33	21A914-01	1N914	100V/0.1A
D34	21A146-01	1N746A	3.3V/0.5W
* D35	21A914-01	1N914	100V/0.1A
* D36	21A914-01	1N914	100V/0.1A
D37	21A146-01	1N746A	3.3V/0.5W
D38	21A146-01	1N746A	3.3V/0.5W
D39	21A914-01	1N914	100V/0.1A
D40	21A914-01	1N914	100V/0.1A
IC1	37-074-01	TL074	
IC3	37-072-01	TL072	
IC4	37-072-01	TL072	
* IC5	37-072-01	TL072	
IC6	37-074-01	TL074	
IC7	37-307-01	MN3007	
IC8	37-301-01	MN3101	
IC9	37-072-01	TL072	
IC10	37-072-01	TL072	
JW1-41	76-000-XX	JUMPER	
JW43-74	76-000-XX	JUMPER	
** JW75-76	76-000-05	JUMPER	
JW77-78	76-000-05	JUMPER	
JW79-82	76-000-XX	JUMPER	
JW83, 84	76-000-XX	JUMPER	
JW85-87	76-000-XX	JUMPER	
J1	39-119-01	T/S	JACK
J2	39-120-01	T/R/S	JACK
J3	NOT USED		
J4	NOT USED		
** J10	17-105-02	HEADER	
** J11	17-105-02	HEADER	
* J12	17-836-01	TAB	
* J13	17-894-01	TAB	
* J14	17-894-01	TAB	
* J15	17-894-01	TAB	
J16	17-105-14	HEADER	
** J17	17-105-03	HEADER	
P1	70-132-01	10KL	
P2	70-132-01	10KL	
P3	70-132-01	10KL	
P4	70-103-22	10KA	
P5	70-132-01	10KL	
P6	70-103-22	10KA	
P7	70-203-23	20KRA	
P8	70-503-22	50KA	
P9	70-202-22	2KA	
P10	70-133-01	50KL	
P11	70-103-22	10KA	
P12	70-103-22	10KA	
P13	70-132-01	10KL	
P14	70-104-23	100KRA	
⚠ ** Q1	96R175-01	J175	
⚠ Q2	96R175-01	J175	
⚠ Q3	96R510-01	2N5210	
⚠ Q4	96R510-01	2N5210	
⚠ Q5	96R175-01	J175	
⚠ Q6	96R175-01	J175	
⚠ Q7	96R175-01	J175	
⚠ Q8	96R112-01	J112	
⚠ Q9	96R175-01	J175	
⚠ Q10	96R112-01	J112	
⚠ Q11	96R510-01	2N5210	
⚠ Q12	96R510-01	2N5210	
⚠ Q13	96R112-01	J112	
⚠ Q14	96R112-01	J112	
⚠ Q15	96R112-01	J112	
⚠ Q16	96R055-01	MPS-A55	
⚠ Q17	96R013-01	MPSA13	
⚠ Q18	96R055-01	MPS-A55	
⚠ Q19	96R112-01	J112	
⚠ Q20	96R013-01	MPSA13	
⚠ Q21	96R006-01	MPSA06	
⚠ Q22	96R006-01	MPSA06	
⚠ Q25	96R112-01	J112	
⚠ Q26	96R112-01	J112	
⚠ Q27	96R112-01	J112	
R1	76-153-01	15K	
R2	76-222-01	2.2K	
R3	76-684-01	680K	
R4	76-682-01	6.8K	
R5	76-472-01	4.7K	
R6	76-223-01	22K	
R7	76-152-01	1.5K	
R8	76-223-01	22K	
R9	76-681-01	680	
R10	76-223-01	22K	
R11	76-105-01	1M	
R12	76-222-01	2.2K	
R13	76-152-01	1.5K	
R14	76-103-01	10K	
R15	76-103-01	10K	
R16	OPTIONAL		
R17	76-103-01	10K	
R18	76-472-01	4.7K	
R19	76-223-01	22K	
R20	76-473-01	47K	
R21	76-473-01	47K	
R22	76-473-01	47K	
R23	76-103-01	10K	
R24	76-102-01	1K	
R25	76-223-01	22K	
R26	76-152-01	1.5K	
R27	76-472-01	4.7K	
R28	76-472-01	4.7K	
R29	76-223-01	22K	
R30	76-472-01	4.7K	
R31	76-333-01	33K	
R32	76-154-01	150K	
R33	76-102-01	1K	
R34	76-472-01	4.7K	
R35	76-473-01	47K	
R36	76-473-01	47K	
R37	76-103-01	10K	
R38	76-103-01	10K	
** R39	76-102-01	1K	
R40	76-105-01	1M	
* R41	76-104-01	100K	
* R42	76-220-01	22	
* R43	76-103-01	10K	
* R44	76-103-01	10K	
* R45	76-103-01	10K	
* R46	76-474-01	470K	
R48	76-220-01	22	
R49	76-222-01	2.2K	
R50	76-331-01	330	
R51	76-752-01	7.5K	
R52	76-752-01	7.5K	
R53	76-102-01	1K	
R55	76-103-01	10K	
R56	76-332-01	3.3K	
R57	76-470-01	47	
R58	76-470-01	47	
R59	76-104-01	100K	
R60	76-332-01	3.3K	
R61	76-332-01	3.3K	
R62	76-182-01	1.8K	
R63	76-682-01	6.8K	
R64	76-392-01	3.9K	
R65	76-274-01	270K	
R66	76-682-01	6.8K	
R67	76-334-01	330K	
R68	76-332-01	3.3K	
R69	76-471-01	470	
R70	76-153-01	15K	
R71	76-273-01	27K	
R72	76-471-01	470	
R73	76-104-01	100K	
R74	76-683-01	68K	
R75	76-103-01	10K	
R76	76-104-01	100K	
R77	76-334-01	330K	
R78	76-102-01	1K	
R79	76-682-01	6.8K	
R80	76-473-01	47K	
R81	76-223-01	22K	
R82	76-753-01	75K	
R83	76-103-01	10K	
R84	76-105-01	1M	
R85	76-105-01	1M	
R86	76-105-01	1M	
R87	76-103-01	10K	
R88	76-153-01	15K	
** R89	76-105-01	1M	
R90	76-105-01	1M	
** R91	76-104-01	100K	
R92	76-152-01	1.5K	
R93	76-103-01	10K	
R94	76-105-01	1M	
R95	76-103-01	10K	
R96	76-472-01	4.7K	
R97	76-105-01	1M	
R98	76-222-01	2.2K	
R99	76-333-01	33K	
R100	76-222-01	2.2K	
R101	76-105-01	1M	
R102	76-333-01	33K	
R103	76-473-01	47K	
R104	76-222-01	2.2K	
R105	76-333-01	33K	
R106	76-333-01	33K	
R107	76-104-01	100K	
R108	76-222-01	2.2K	
R109	76-473-01	47K	
R110	76-473-01	47K	
R111	76-473-01	47K	
R112	76-222-01	2.2K	
R113	76-471-01	470	
R114	76-101-01	100	
R115	76-220-01	22	
R116	76-220-01	22	
R117	76-471-01	470	
R118	76-101-01	100	
R119	76-105-01	1M	
R120	76-105-01	1M	
R121	76-471-01	470	
R122	76-103-01	10K	
R123	76-103-01	10K	
R124	76-183-01	18K	
R125	76-183-01	18K	
R126	76-105-01	1M	
S1	88-302-01	DUAL SWITCH	
S2	88-302-01	DUAL SWITCH	
S4	88-302-01	DUAL SWITCH	
S5	88-302-01	DUAL SWITCH	

NOTE:
* = -01 ONLY
** = -02 ONLY
(JW'S -XX PER SYSTEM BOM)
(JW75-78 MUST BE -05)

REV	DATE	BY	CHK'D	DESCRIPTION
⚠2	11/03/97	DLS		CHANGED PARTS TO RADIAL PER E970657, E970658
1	09/24/97	SWR		CHANGED VALUE OF P7 & REDRAWN IN AUTOCAD. PER ECO #970322.
0	05/13/97	REM		UPDATED PER CHECKOFF.

SIGNATURES:		DATE:
DRAWN:	REM	11/26/96
CHK'D:	TEK	05/09/97
APP'D:	TEK	05/09/97
ORIGINAL ISSUED:		05/09/97
PLOT DATE:		11/03/97
PLOT TIME:		09:24:17
FILE NAME:		53101P2_

SLM Electronics
11880 BORMAN DR.
ST. LOUIS, MISSOURI
63146

PROJECT NAME: GX-140C/D

DRAWING NAME: PICTORIAL

DRAWING NO. 07P531-01/-02 REV 2_

SCALE: 1:1 SHEET: 1 OF 1

© COPYRIGHT SLM ELECTRONICS