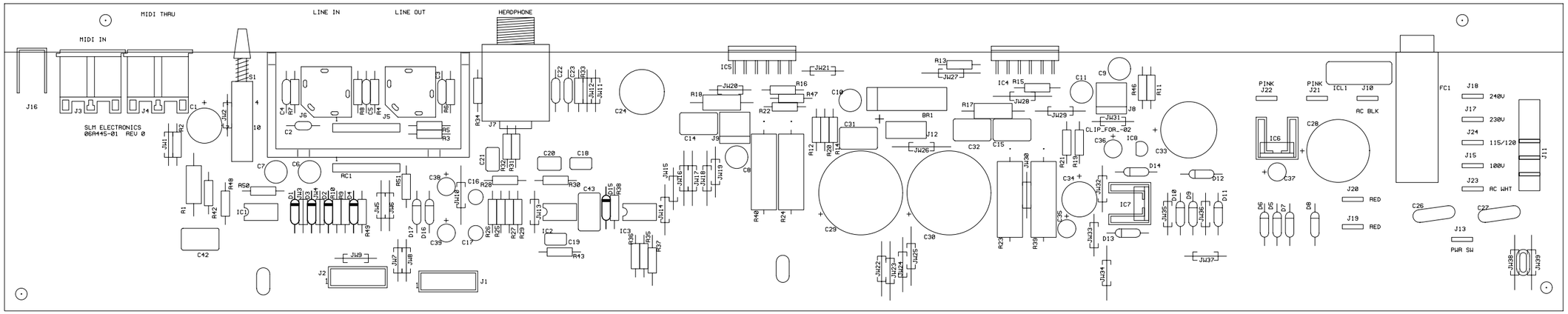

REF DES	PART #	DESCRIPTION	
BR1	21-210-01	10AMP	DIODE
C1	12R227-32	220uF	35V
C2	10A222-11	.0022uF	100V
C3	10A222-11	.0022uF	100V
C4	10A100-21	100PF	200V
C5	10A100-21	100PF	200V
C6	12R106-36	10uF	35V
C7	12R106-36	10uF	35V
C8	12R106-36	10uF	35V
C9	12R106-36	10uF	35V
C10	12R475-82	4.7uF	50V
C11	12R475-82	4.7uF	50V
C14	10R104-03	.1uF	100V
C15	10R104-03	.1uF	100V
C16	12R225-51	2.2uF	50V
C17	12R225-51	2.2uF	50V
C18	10R472-01	.0047uF	100V
C19	10R472-01	.0047uF	100V
C20	10R223-02	.022uF	100V
C21	10R223-02	.022uF	100V
C22	10A102-11	.001uF	100V
C23	10A102-11	.001uF	100V
C24	12-107-81	100uF	50V
C26	10-332-01	.0033uF	UL
C27	10-332-01	.0033uF	UL
C28	12-688-16	6800uF	16V
C29	12-688-02	6800uF	50V
C30	12-688-02	6800uF	50V
C31	10R104-03	.1uF	100V
C32	10R104-03	.1uF	100V
C33	12-228-26	2200uF	25V
C34	12R227-32	220uF	35V
C35	12R106-35	10uF	35V
C36	12R106-35	10uF	35V
C37	12R106-35	10uF	35V
C38	12R106-35	10uF	35V
C39	12R106-35	10uF	35V
C42	10R104-03	.1uF	100V
C43	10R104-03	.1uF	100V
D1	21A914-01	1N914	
D2	21A914-01	1N914	
D3	21A914-01	1N914	
D4	21A914-01	1N914	
D5	21A402-01	1N4002	100V/1A
D6	21A402-01	1N4002	100V/1A
D7	21A402-01	1N4002	100V/1A
D8	21A402-01	1N4002	100V/1A
D9	21A402-01	1N4002	100V/1A
D10	21A402-01	1N4002	100V/1A
D11	21A402-01	1N4002	100V/1A
D12	21A402-01	1N4002	100V/1A
D13	21A402-01	1N4002	100V/1A
D14	21A402-01	1N4002	100V/1A
D15	21A914-01	1N914	
D16	21A443-01	1N4743A	13V/1W
D17	21A443-01	1N4743A	13V/1W

REF DES	PART #	DESCRIPTION	
FC1	23-346-01	FUSE	HOLDER
IC1	37-072-01	TL072	
IC2	37-532-01	NE5532	
IC3	37-072-01	TL072	
4 IC4	37-886-02	LM3886T	
IC5	37-886-02	LM3886T	
IC6	37-705-01	78M05	
IC7	37-705-01	78M05	
IC8	37-905-02	79L05	
ICL1	73-501-03	3A	
J1	17-193-07	HEADER	
J2	17-193-07	HEADER	
J3	39-900-01	5_PIN	MIDI_JACK
J4	39-900-01	5_PIN	MIDI_JACK
J5	39-114-05	114BPC	JACK
J6	39-114-05	114BPC	JACK
J7	39-117-51	T/R/S	JACK
4 J8	17-309-02	CONN	LOCKING
J9	17-309-02	CONN	LOCKING
J10	17-836-01	TAB	
J11	17-320-05		HEADER
J12	17-310-03	156	HEADER
J13	17-836-01	TAB	
J14	NOT USED		
J15	17-836-01	TAB	
J16	51-149-01	GNDLUG	
J17	17-836-01	TAB	
J18	17-836-01	TAB	
J19	17-836-01	TAB	
J20	17-836-01	TAB	
J21	17-836-01	TAB	
J22	17-836-01	TAB	
J23	17-836-01	TAB	
J24	17-836-01	TAB	
6 JW1-JW30	76-000-05	JUMPER	
5 JW31	76-000-05	JUMPER	
JW32-JW39	76-000-05	JUMPER	

REF DES	PART #	DESCRIPTION	
R1	78-033-01	3.3	1W
R2	76-221-01	220	
R3	76-102-01	1K	
R4	76-102-01	1K	
R5	76-105-01	1M	
R6	76-105-01	1M	
R7	76-221-01	220	
R8	76-221-01	220	
R9	76-473-01	47K	
R10	76-473-01	47K	
R11	76-242-02	2.49K	1%
R12	76-242-02	2.49K	1%
R13	76-221-01	220	
R14	76-221-01	220	
R15	76-104-01	100K	
R16	76-104-01	100K	
4 R17	78-033-01	3.3	1W
R18	78-033-01	3.3	1W
R19	76-105-01	1M	
R20	76-105-01	1M	
R21	76-471-01	470	
R22	76-471-01	470	
4 R23	78-001-03	0.1	3W
R24	78-001-03	0.1	3W
R25	76-152-01	1.5K	
R26	76-152-01	1.5K	
R27	76-512-02	5.11K	1%
R28	76-512-02	5.11K	1%
R29	76-512-02	5.11K	1%
R30	76-512-02	5.11K	1%
R31	76-101-01	100	
R32	76-101-01	100	
R33	76-105-01	1M	
R34	76-105-01	1M	
R35	76-333-01	33K	
R36	76-103-01	10K	
R37	76-103-01	10K	
R38	76-222-01	2.2K	
4 R39	78-001-03	0.1	3W
R40	78-001-03	0.1	3W
R42	76-221-01	220	
R43	76-221-01	220	
R46	76-102-01	1K	
R47	76-102-01	1K	
R48	76-103-01	10K	
R49	76-102-01	1K	
R50	76-103-01	10K	
R51	76-102-01	1K	
RC1	99-124-01	8_PIN	RIBBON
S1	88-304-01	QUAD	SWITCH
	06A445-01	PC BOARD	
	33-576-01	TO-220 HEATSINK	
	33-576-01	TO-220 HEATSINK	

NOTES

1) CAUTION: SHOCK HAZARD!!
THIS UNIT CONTAINS HAZARDOUS VOLTAGE. DISCONNECT POWER AND BE SURE POWER SUPPLY IS DISCHARGED BEFORE TOUCHING INTERNAL PARTS.

2) UNLESS NOTED, RESISTOR VALUES IN OHMS, 1/4W-5%TOL. CAPACITOR VALUES IN MICROFARADS, 50V-10%TOL.

3) VOLTAGES ARE MEASURED WITH 1 MEGOHM OSCILLOSCOPE AND 10 MEGOHM DIGITAL VOLTMETER.

4) NOT USED ON 07-445-01 ASSY.

5) CLIP JUMPER JW31 FOR 07-445-02 ASSY.

6) JW12 IS NOT USED

REV:	DATE:	DESCRIPTION	ECO/ECR NO:	SIGNATURE:
0	2-3-99	ORIGINAL_RELEASE	-	

THIS INFORMATION CONTAINED ON THIS DRAWING IS PROPRIETARY TO ST. LOUIS MUSIC, INC.

SIGNATURES:		DATE:	
DRAWN:	RLB	10-29-98	SLM Electronics 11880 Borman Dr. St. Louis, Missouri 63146
CHK'D:	OK	10-29-98	ORIGINAL USED ON: DX-112a/212a
APP'D:			

TOLERANCES:	DRAWING SIZE: C	ITEM DESCRIPTION: POWER_AMP_PICTORIAL
	DRAWING TYPE:	
	CLASS CODE:	DRAWING NO. 07P445-01/02
	SCALE: 1:1 SHEET: SHT 1 OF 2	

B C D E F

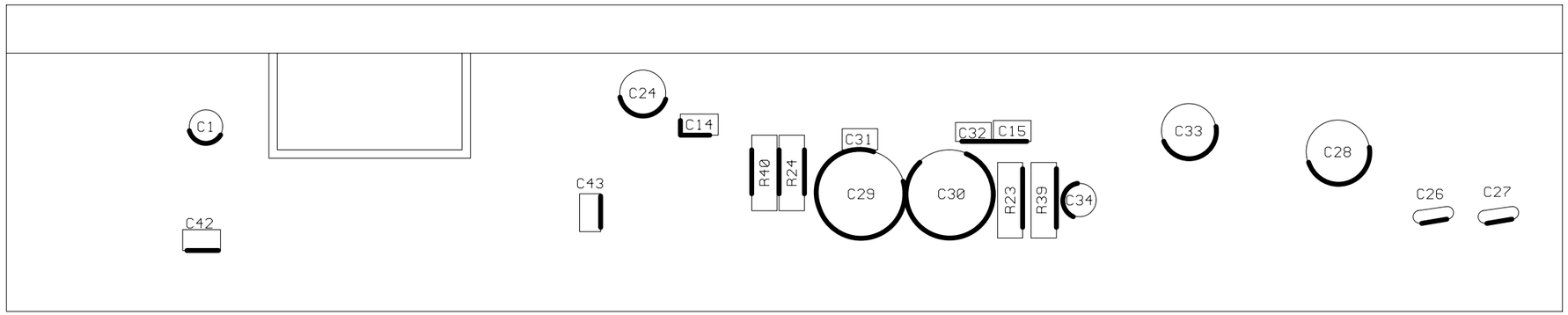

GOOP PER STANDARD GOOP PRACTICE

GOOP MUST BE CLEAR OF HEADERS AND TABS

REV:	DATE:	DESCRIPTION	ECO/ECR NO:	SIGNATURE:
-	-	SEE_SHT_1_FOR_REV_HISTORY	-	

THIS INFORMATION CONTAINED ON THIS DRAWING IS PROPRIETARY
TO ST. LOUIS MUSIC, INC.

SIGNATURES:		DATE:	
DRAWN:	RLB	10-29-98	11880 Borman Dr. St. Louis, Missouri 63146
CHK'D:	OK	10-29-98	ORIGINAL USED ON: DX-112a/212a
APP'D:			

TOLERANCES:	DRAWING SIZE: C	ITEM DESCRIPTION: POWER_AMP_PICTORIAL
	DRAWING TYPE:	
	CLASS CODE:	DRAWING NO. 07P445-01/02
	SCALE: 1:1 / SHEET: SHT 2 OF 2	